Canonical Coordinates for Radiation-Belt Mapping and Transport

Michael Schulz
Lockheed Martin Retiree
1037 Twin Oaks Court
Redwood City, CA 94061 (U.S.A.)

LOCKHEED MARTIN

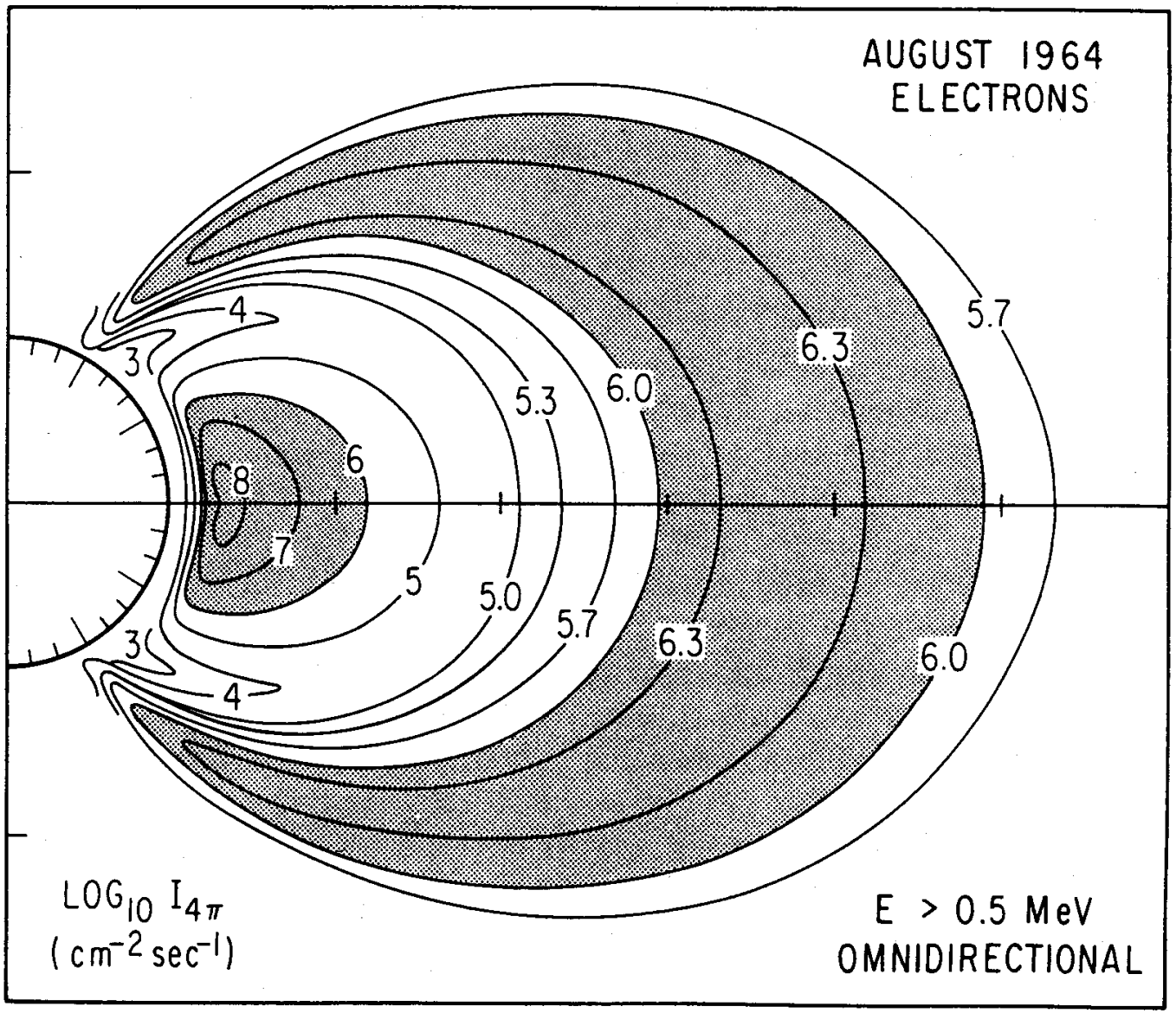
AUGUST 1964
ELECTRONS
4
3
8
6
7
5
5.3
5.0
5.7
6.0
6.3
5.7
6.3
6.0
3
4
LOG10 I4π
(cm-2 sec-1)
E > 0.5 MeV
OMNIDIRECTIONAL

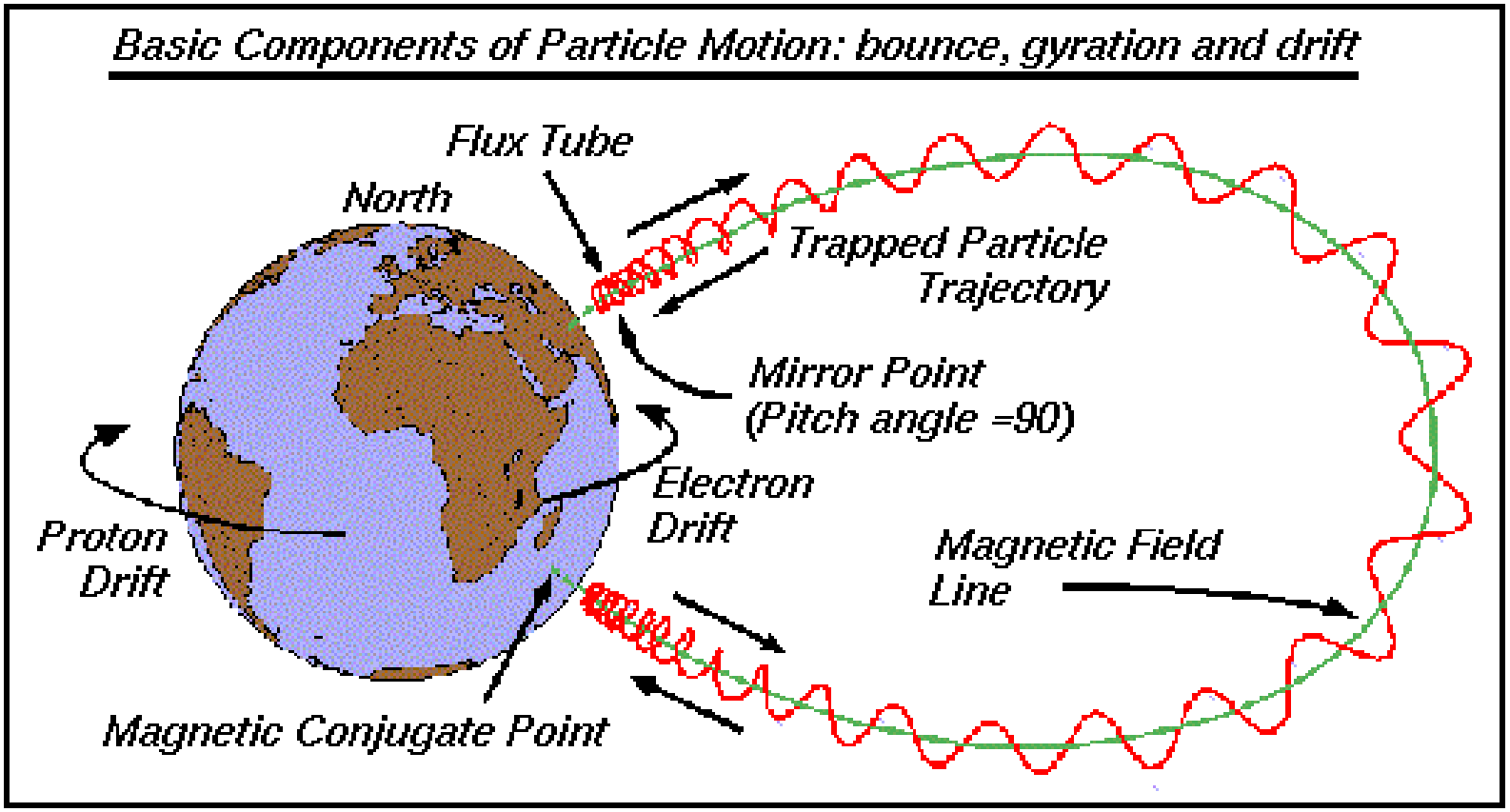
Basic Components of Particle Motion: bounce, gyration and drift
Flux Tube
North
Trapped Particle
Trajectory
Mirror Point
(Pitch angle =90)
Electron
Drift
Proton
Drift
Magnetic Field
Line
Magnetic Conjugate Point

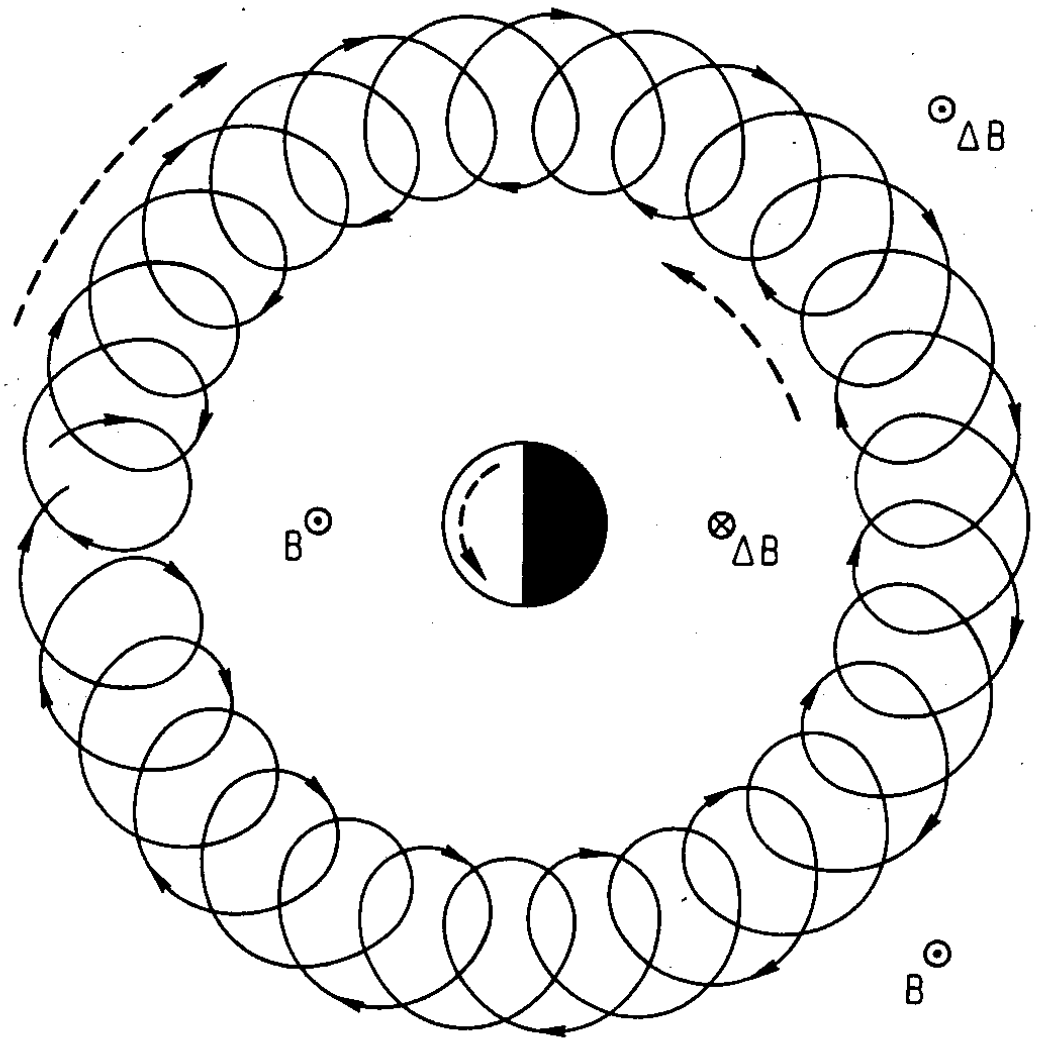
ΔB
B
ΔB
B

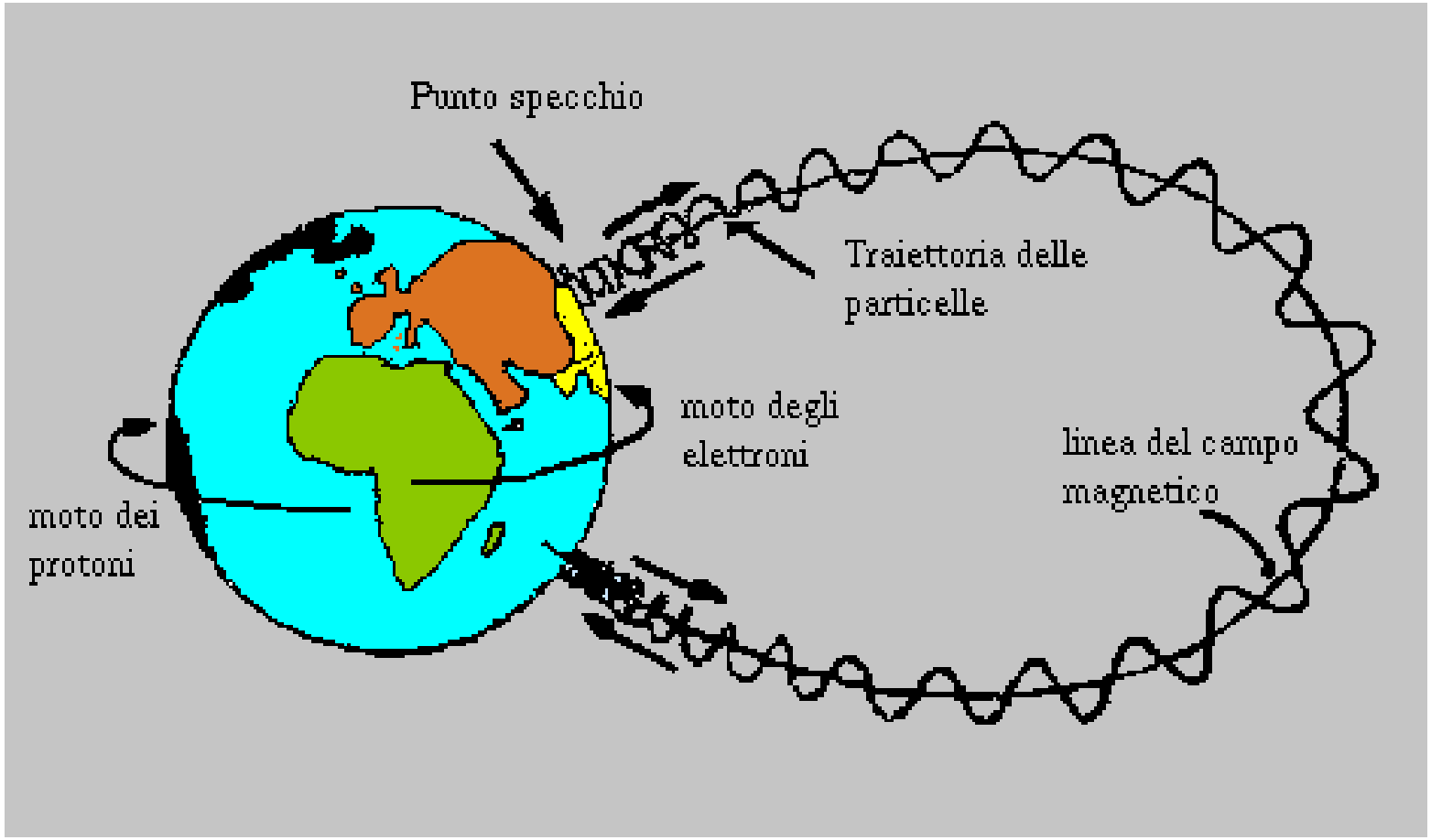
Punto specchio
Traiettoria delle particelle
moto degli elettroni
linea del campo magnetico
moto dei protoni

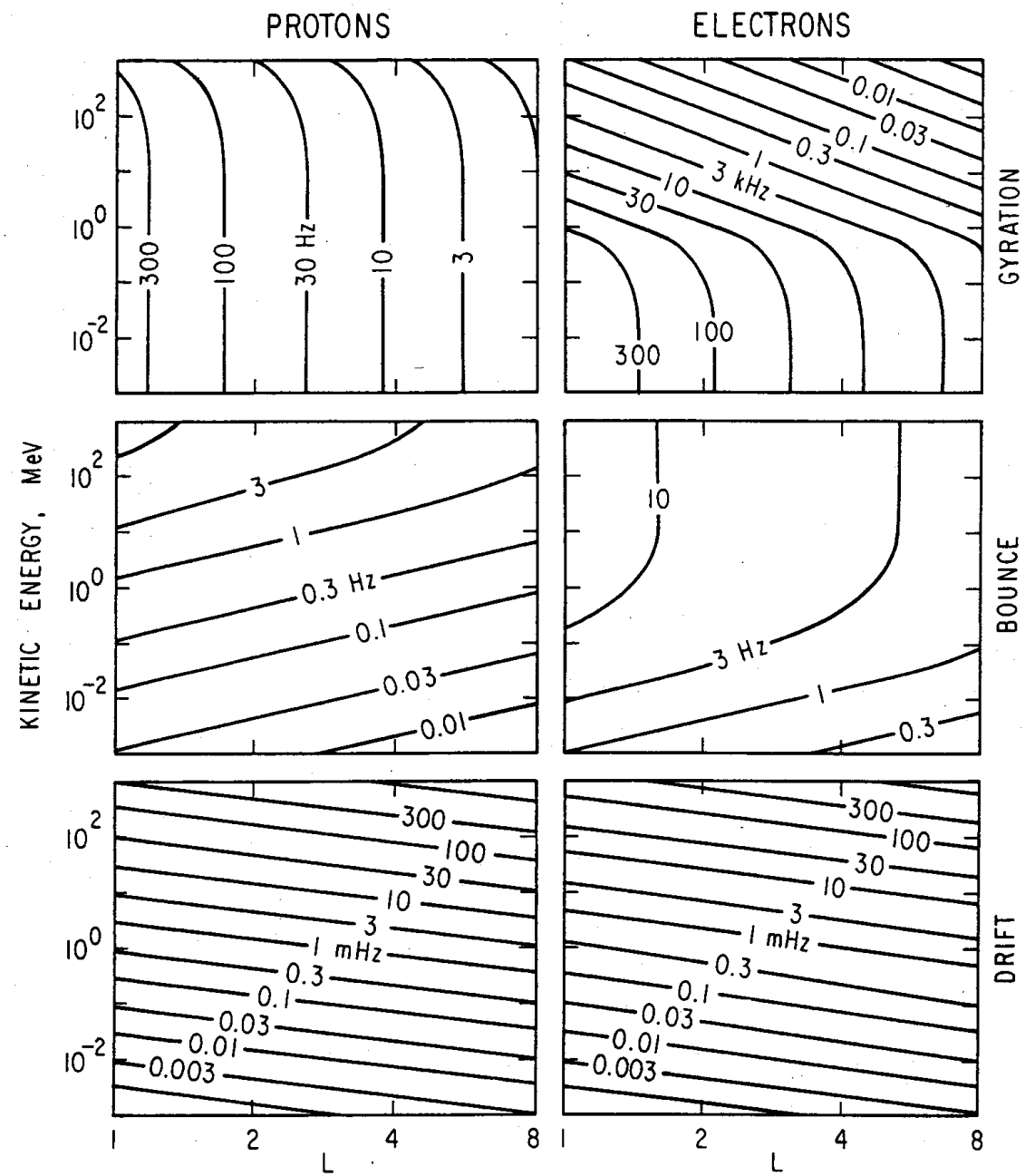
PROTONS
ELECTRONS
GYRATION
BOUNCE
DRIFT
KINETIC ENERGY, MeV
L
300
100
30 Hz
10
3
0.01
0.03
0.1
0.3
1
3 kHz
10
30
100
300
3
1
0.3 Hz
0.1
0.03
0.01
10
3 Hz
1
0.3
300
100
30
10
3
1 mHz
0.3
0.1
0.03
0.01
0.003
300
100
30
10
3
1 mHz
0.3
0.1
0.03
0.01
0.003

ADIABATIC INVARIANTS

$$M = p_\perp^2/2m_0B \qquad J = \oint p_\parallel \, ds \qquad \Phi = \oint \mathbf{B} \cdot d\mathbf{A}$$

$$\mu = M/\gamma \qquad K = (8m_0M)^{-1/2}J$$

HAMILTONIAN FUNCTION

$$H = [p^2c^2 + m_0^2c^4]^{1/2} - m_0c^2 - q\mu_E(\Omega/La) + qV(L, \varphi; t)$$

$$p^2 = 2m_0MB_0 \csc^2\alpha_0 \qquad \text{(at constant } K\text{)}$$

FOURTH ADIABATIC INVARIANT

$$\Lambda \equiv p^3 \oint (1/B)\, ds$$

This is essentially a phase-space volume (i.e., the product of a momentum-space volume and a flux-tube volume).

Conserved (instead of M and J) in the limit of strong pitch-angle diffusion (such that a particle's equa-torial pitch angle is fully randomized on the bounce time scale.

CANONICAL ACTION INTEGRALS

$$J_i \equiv \oint_i [\mathbf{p} + (q/c)\mathbf{A}] \cdot d\mathbf{s}_i$$

PHASE-SPACE DENSITY

$f = j/p^2$ $\qquad$ $\bar{f}$ = average of f over $\{\varphi_1, \varphi_2, \varphi_3\}$

DIFFUSION EQUATION

$$\frac{\partial \bar{f}}{\partial t}+\sum_i \frac{\partial}{\partial J_i}\left[\left\langle \frac{\mathrm{d}J_i}{\mathrm{d}t}\right\rangle_\nu \bar{f}\right]=\sum_{i,j}\frac{\partial}{\partial J_i}\left[D_{ij}\frac{\partial \bar{f}}{\partial J_j}\right]-\frac{\bar{f}}{\tau_q}+\bar{S}\,,$$

where

$$\sum_i \frac{\partial}{\partial J_i}\left[\left\langle \frac{\mathrm{d}J_i}{\mathrm{d}t}\right\rangle_\nu \bar{f}\right]=\frac{1}{\Im}\sum_i \frac{\partial}{\partial Q_i}\left[\Im\left\langle \frac{\mathrm{d}Q_i}{\mathrm{d}t}\right\rangle_\nu \bar{f}\right]$$

and

$$\sum_{i,j}\frac{\partial}{\partial J_i}\left[D_{ij}\frac{\partial \bar{f}}{\partial J_j}\right]=\frac{1}{\Im}\sum_{i,j}\frac{\partial}{\partial Q_i}\left[\Im\tilde{D}_{ij}\frac{\partial \bar{f}}{\partial Q_j}\right]\,,$$

and $\Im \equiv \det\{\partial J_i/\partial Q_j\}$

Geophysical Monograph 97

Radiation Belts
Models and Standards

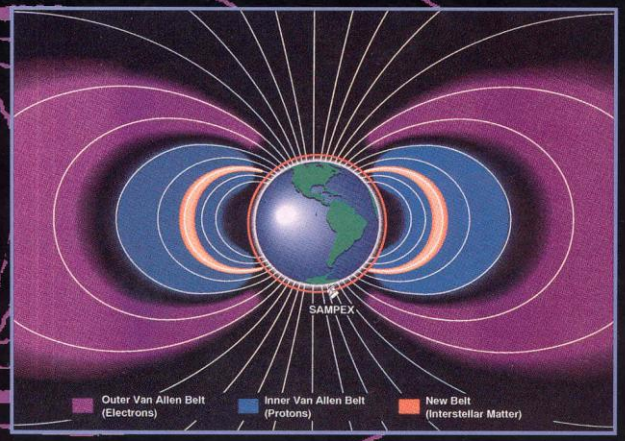

J. F. Lemaire, D. Heynderickx, and D. N. Baker, *Editors*

DIFFUSION PROCESSES

Radial:

- Electric fields induced by magnetospheric compressions
- Impulses in magnetospheric convection electric field
- Geomagnetic pulsations (ULF)
- Electric fields induced by substorms

Pitch-angle:

- Whistler-mode waves (VLF hiss, chorus, transmitters)
- Electromagnetic ion-cyclotron (EMIC) waves
- Electrostatic cyclotron harmonic (ECH) waves

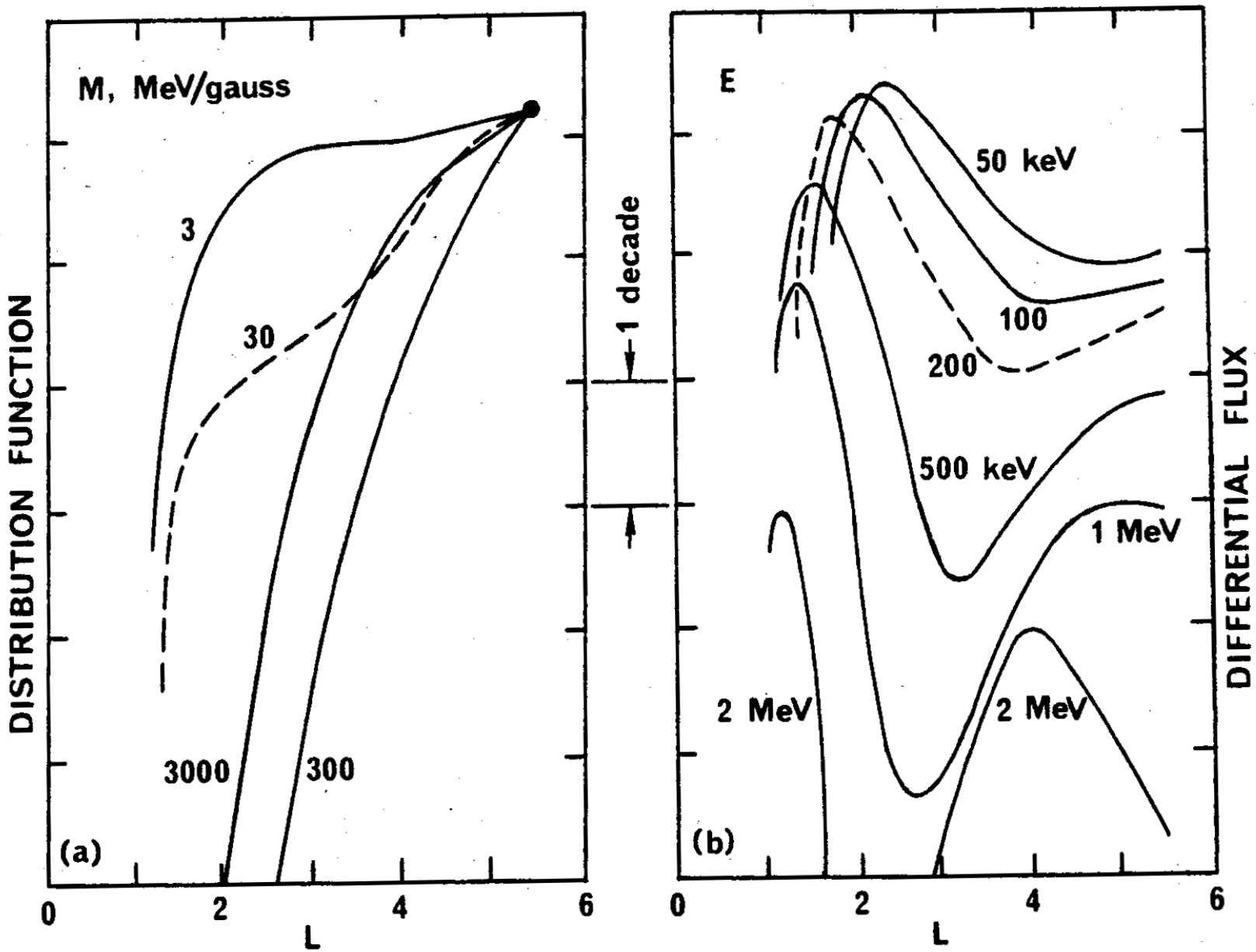
M, MeV/gauss
3
30
3000
300
(a)
DISTRIBUTION FUNCTION
0
2
4
6
L
1 decade
E
50 keV
100
200
500 keV
1 MeV
2 MeV
2 MeV
(b)
DIFFERENTIAL FLUX
0
2
4
6
L

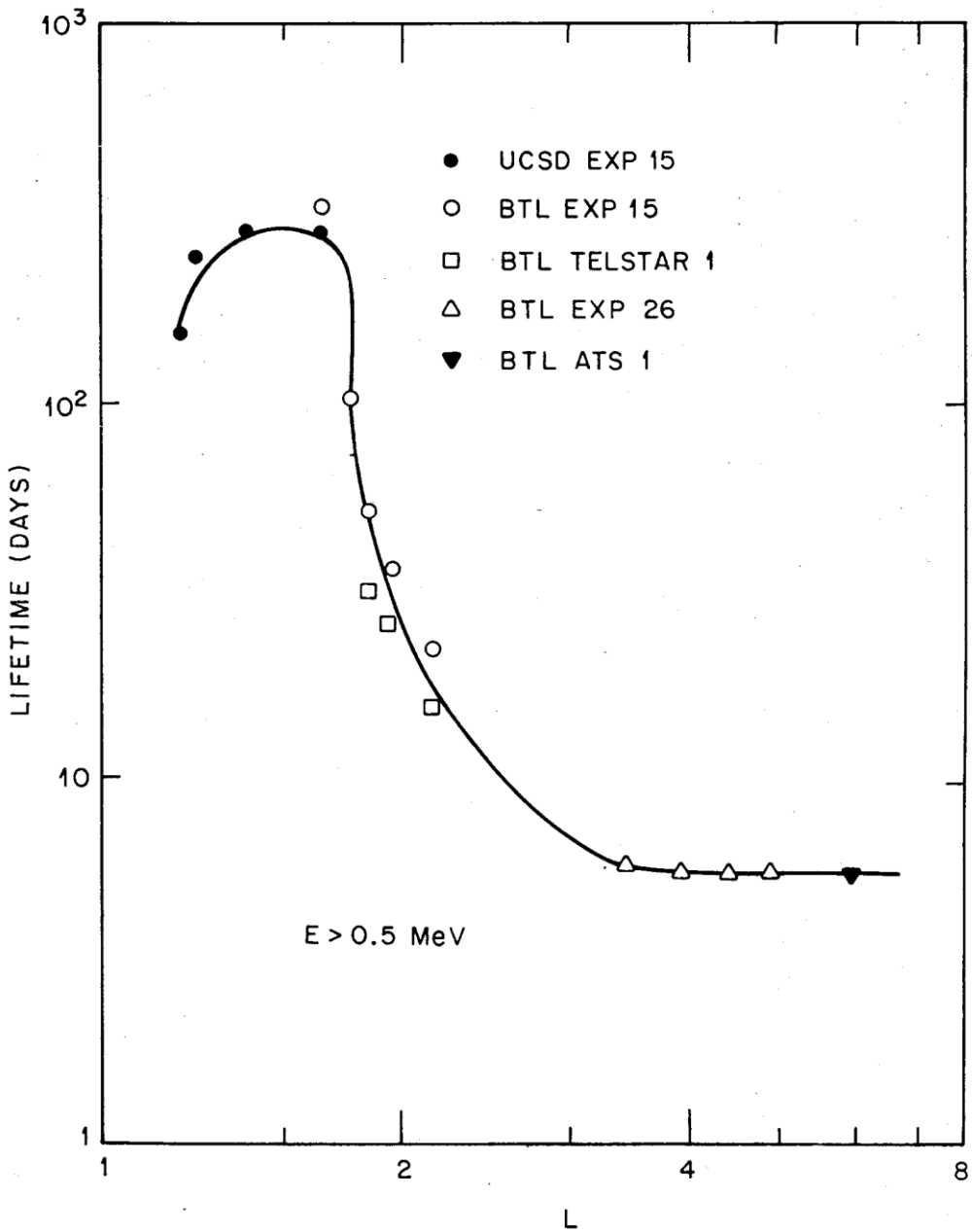
UCSD EXP 15
BTL EXP 15
BTL TELSTAR 1
BTL EXP 26
BTL ATS 1
E > 0.5 MeV
LIFETIME (DAYS)
L
10^3
10^2
10
1
1
2
4
8

Starfish Event (1.4 MT) 09:00:09 UT, 9 July 1962
400 km above a point 31 km SW of Johnson Island

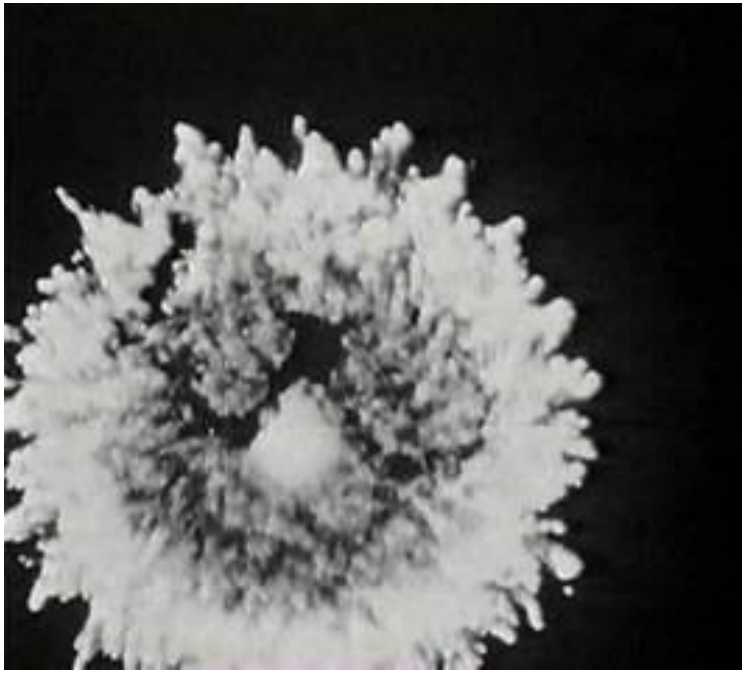

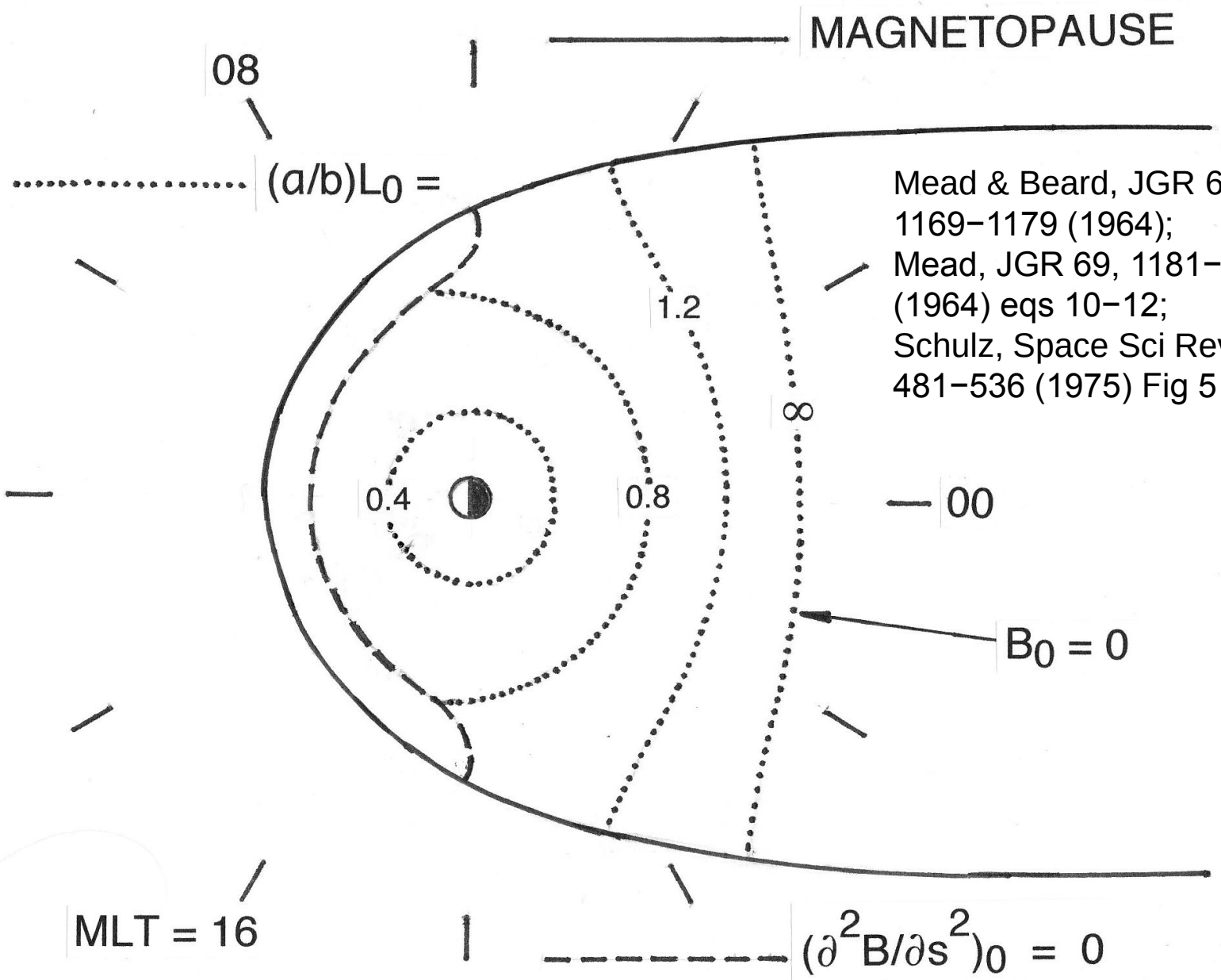

Mead & Beard, JGR 69, 1169−1179 (1964); Mead, JGR 69, 1181−1195 (1964) eqs 10−12; Schulz, Space Sci Rev 17, 481−536 (1975) Fig 5

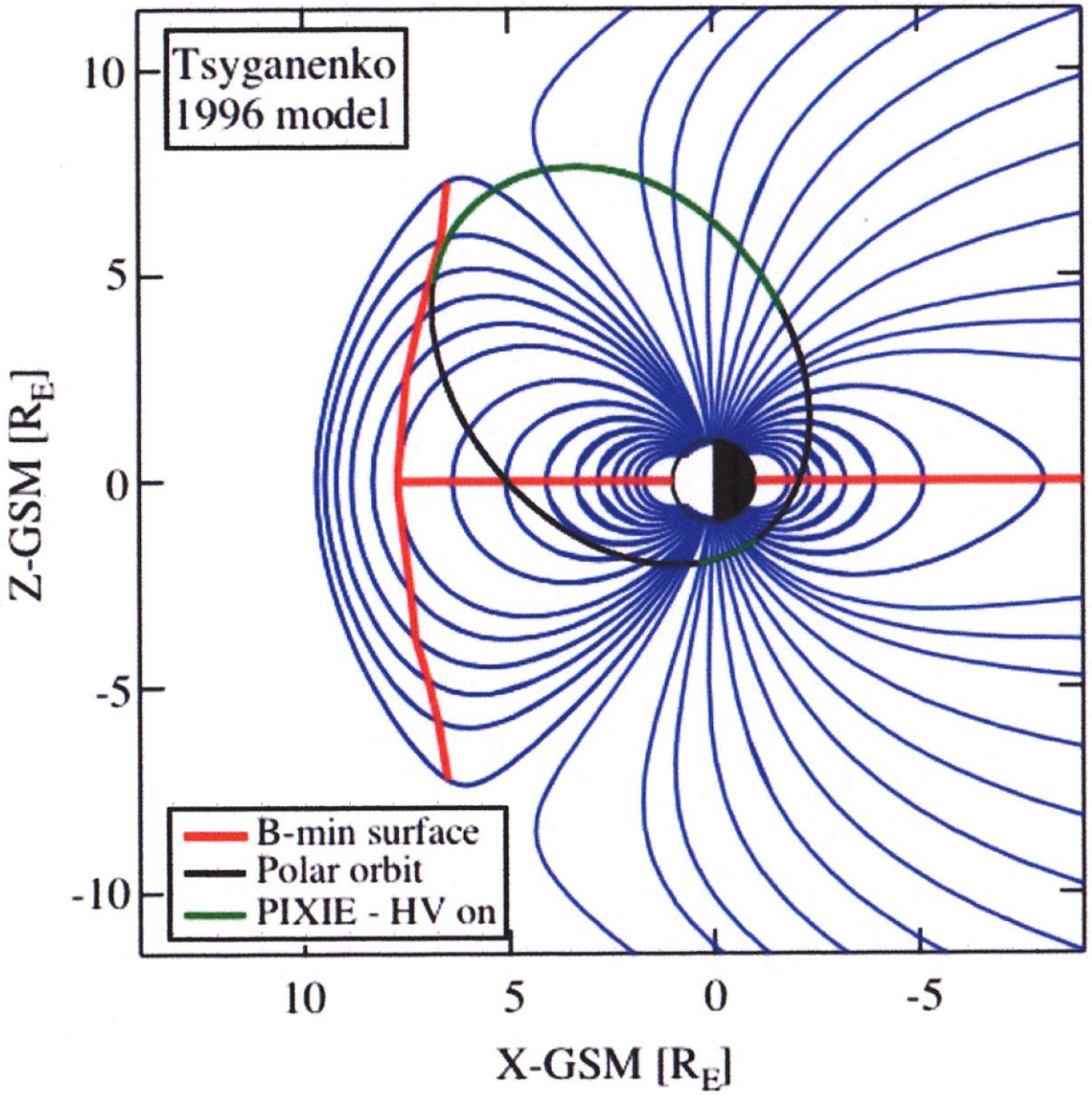
Tsyganenko
1996 model
B-min surface
Polar orbit
PIXIE - HV on
10
5
0
-5
-10
Z-GSM [R_E]
10
5
0
-5
X-GSM [R_E]

Particle Energization *in situ*

- Electromagnetic cyclotron (e.g., whistler-mode) waves
- Particles scattered toward loss cone lose energy
- Particles scattered away from loss cone gain energy
- Oblique propagation effects (e.g., resonance for $m \neq 1$)

Particle Energization by Shock Waves

- Propagating global disturbances resonant with magnetospheric trapped particles in novel ways

AGU Chapman Conference:
Dynamics of the Earth's Radiation Belts and Inner Magnetosphere

- 17−22 July 2011 at St John's, NL (Newfoundland)
- Hotel Sheraton Newfoundland (reserve by 8 June 2011)
- Abstract deadline was long ago (30 March 2011).
- Airport Code YYT (not to confuse with Saint John, NB)
- Local time is 90 minutes ahead of EDT.

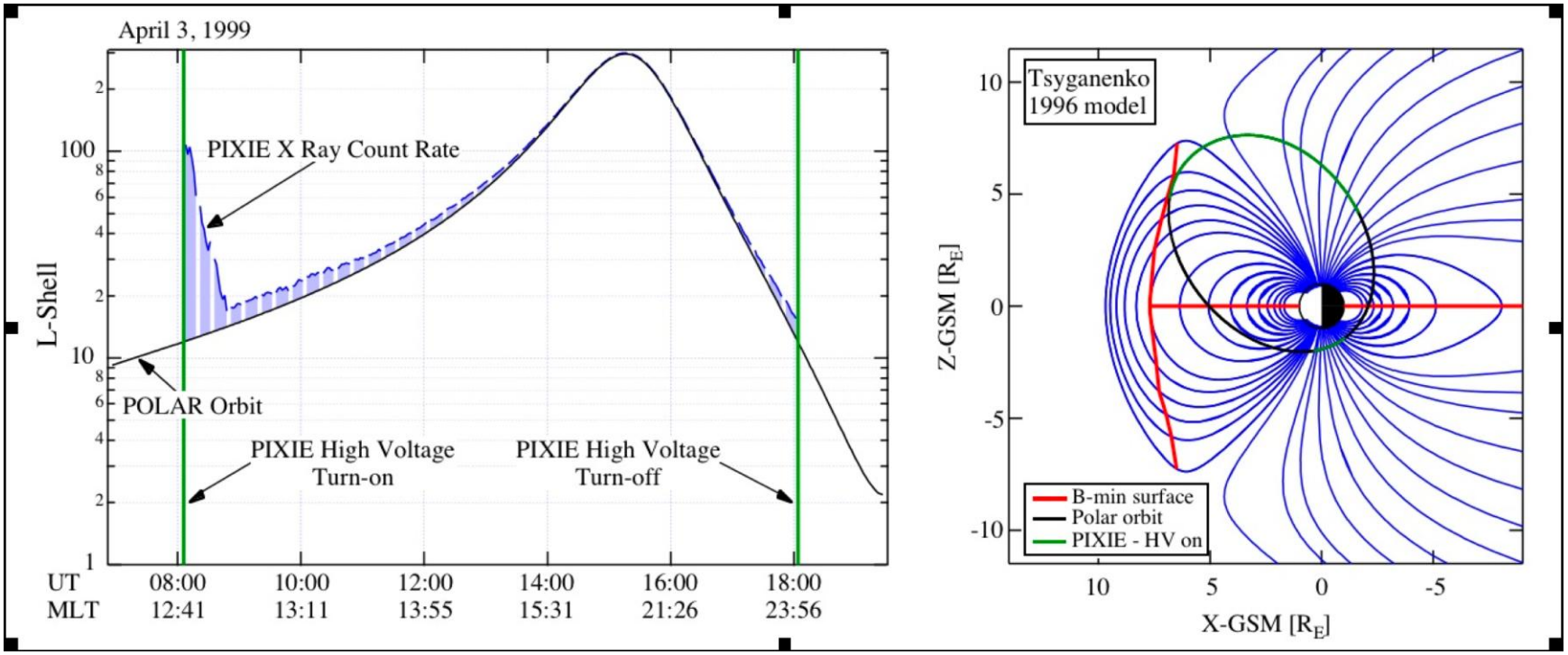
April 3, 1999
PIXIE X Ray Count Rate
L-Shell
POLAR Orbit
PIXIE High Voltage Turn-on
PIXIE High Voltage Turn-off
UT
MLT
08:00
12:41
10:00
13:11
12:00
13:55
14:00
15:31
16:00
21:26
18:00
23:56
Tsyganenko 1996 model
B-min surface
Polar orbit
PIXIE - HV on
Z-GSM [R_E]
X-GSM [R_E]

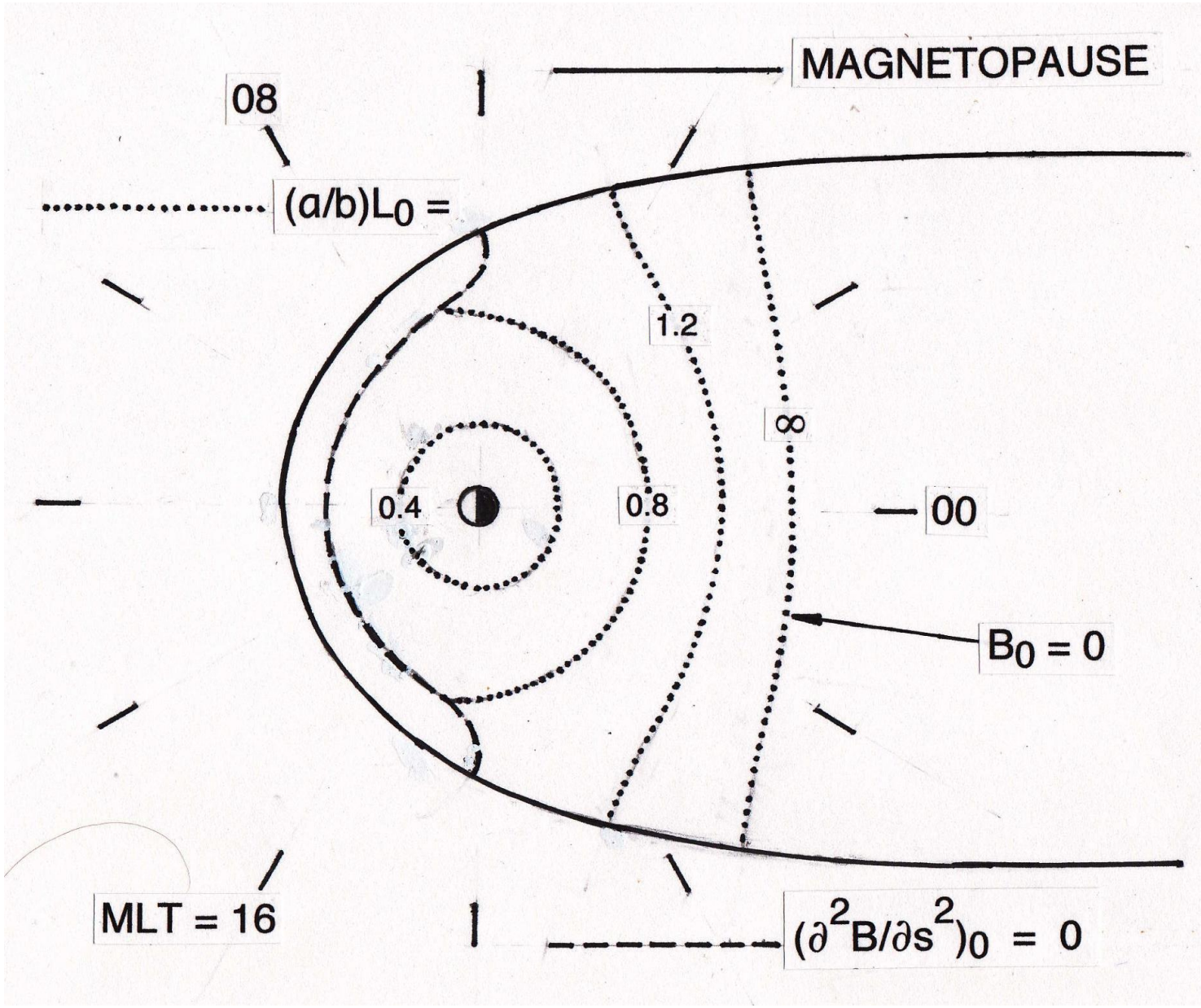
MAGNETOPAUSE
08
(a/b)L0 =
1.2
∞
0.4
0.8
00
B0 = 0
MLT = 16
(∂2B/∂s2)0 = 0

FOURTH ADIABATIC INVARIANT

$$\Lambda \equiv p^3 \oint (1/B)\, ds$$

This is essentially a phase-space volume (i.e., the product of a momentum-space volume and a flux-tube volume). It applies ideally (instead of M and J) in the limit of strong pitch-angle diffusion, such that any particle's equatorial pitch-angle is fully randomized over the nominal bounce period, but such that the resulting particle loss rate is much smaller than the nominal bounce frequency.

Radiation Belts

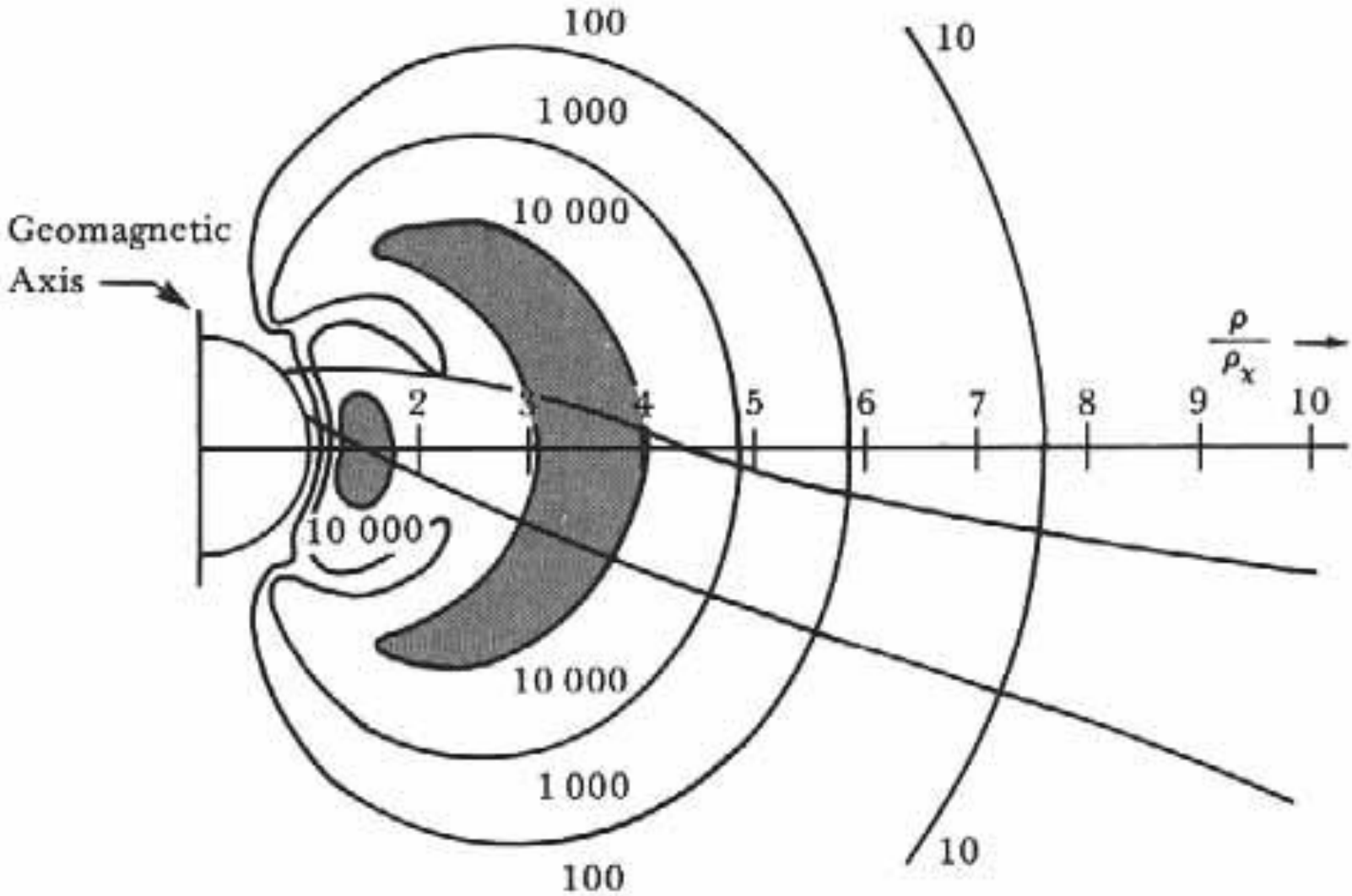

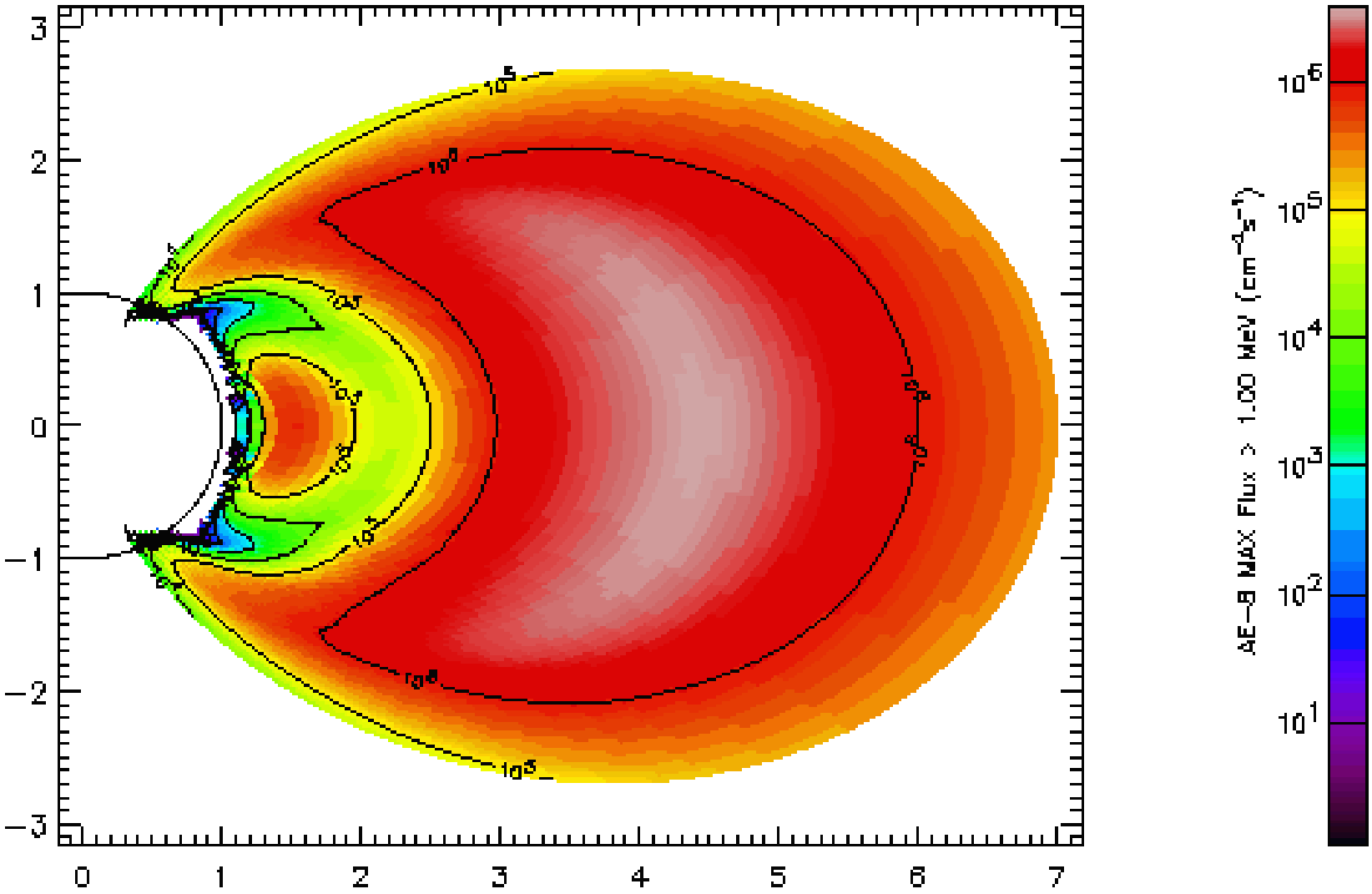

ELECTRONS, E > 1 MeV

Cosmic-Ray Albedo-Neutron Decay (CRAND): A Source for Inner Radiation Belt Protons

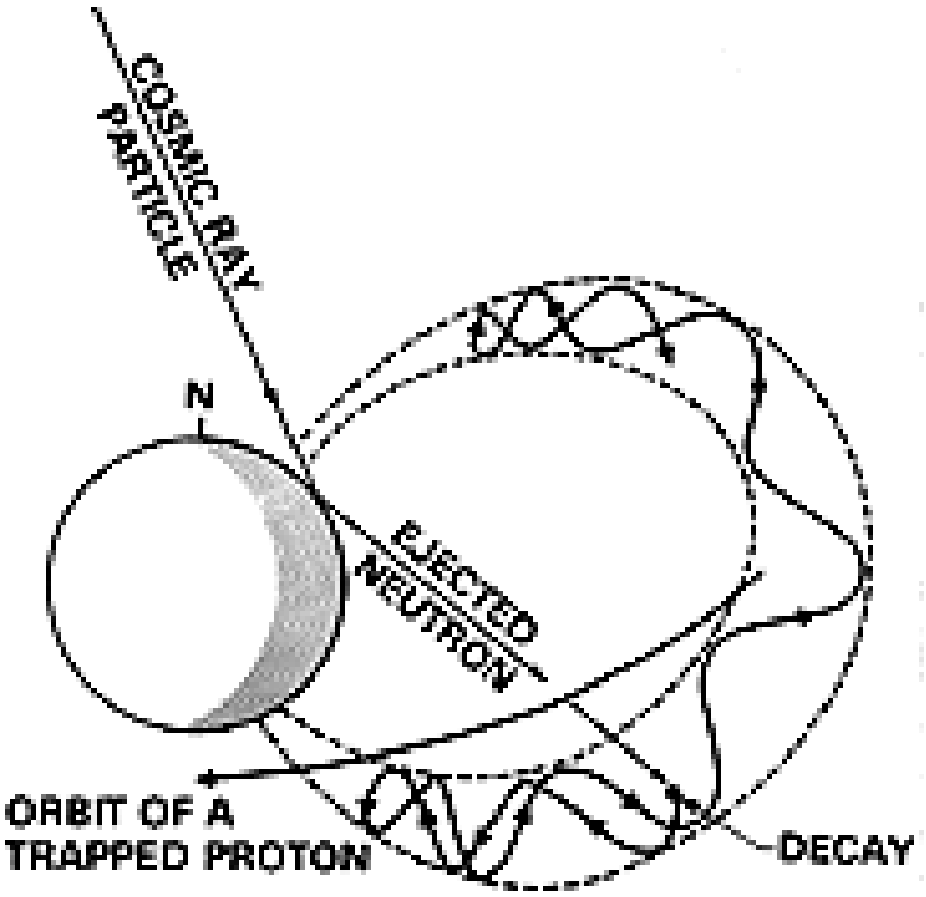

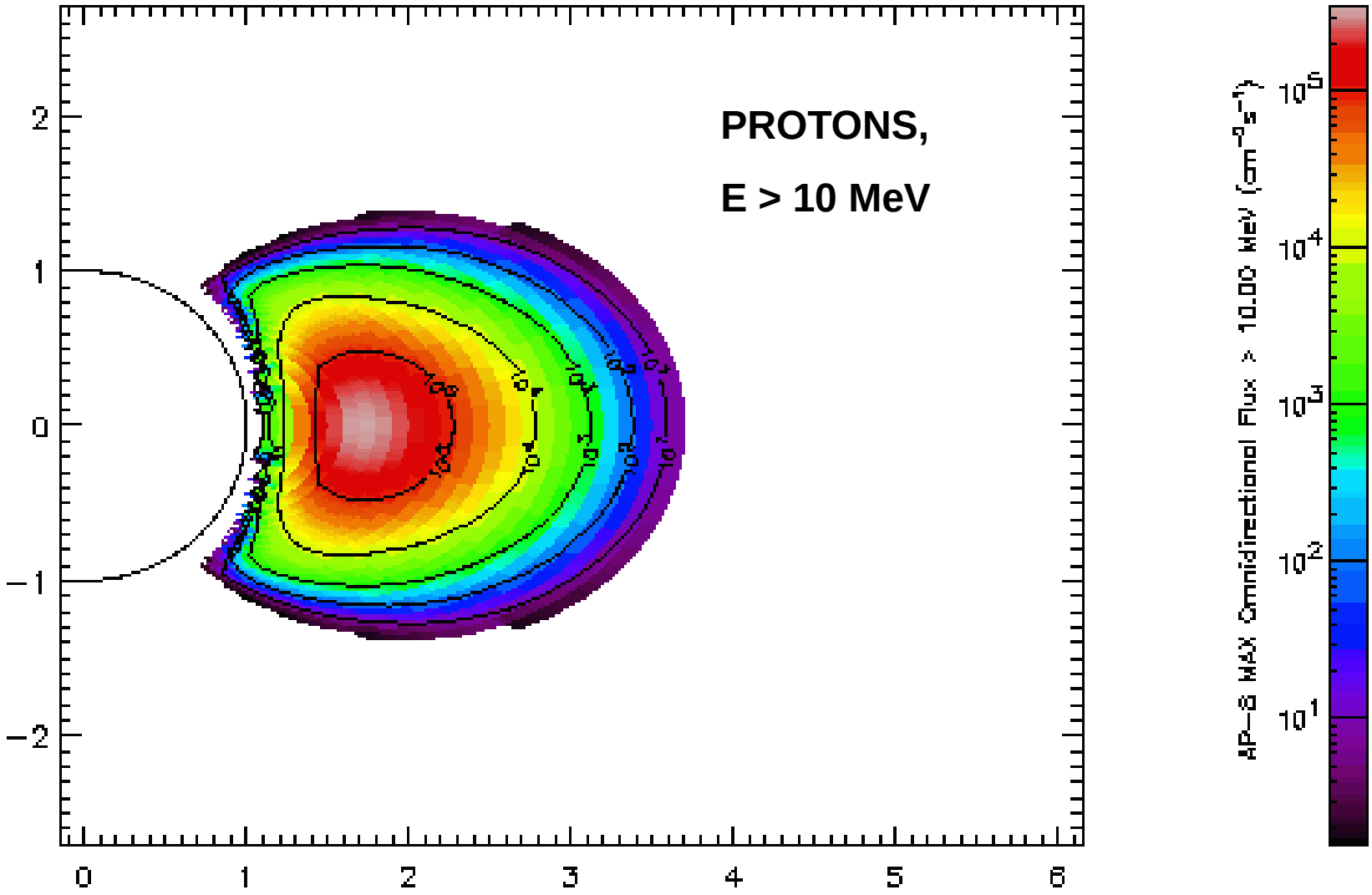
PROTONS,
E > 10 MeV
AP-8 MAX Omnidirectional Flux > 10.00 MeV (cm^{-2}s^{-1})
10^5
10^4
10^3
10^2
10^1
2
1
0
−1
−2
0
1
2
3
4
5
6