CeREs: A Compact Radiation Belt Explorer

PI : Shri Kanekal, GSFC
GSFC CoIs: Eric Christian, Georgia de Nolfo, Tom Flatley, Nick Paschalidis
SWRI CoIs: Mihir Desai, Stefano Livi, Keiichi Ogasawara

First fully NASA funded CubeSat

Novel innovative sensor MERiT:
Miniaturized **E**lectron **P**roton **T**elescope

Synergistic science with Van Allen Probes

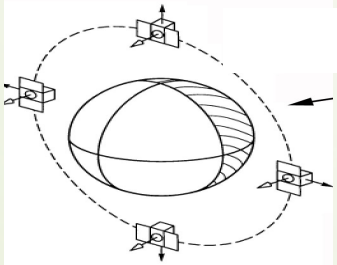

Primary Science Goal: How are electrons energized and how are they lost from the Earth's radiation belts ?
Secondary Science: How are solar flare electrons energized ?

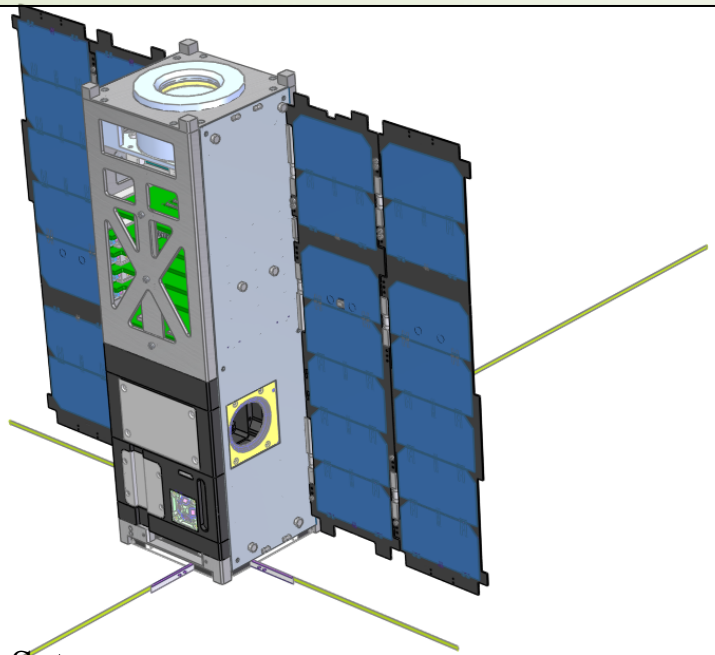

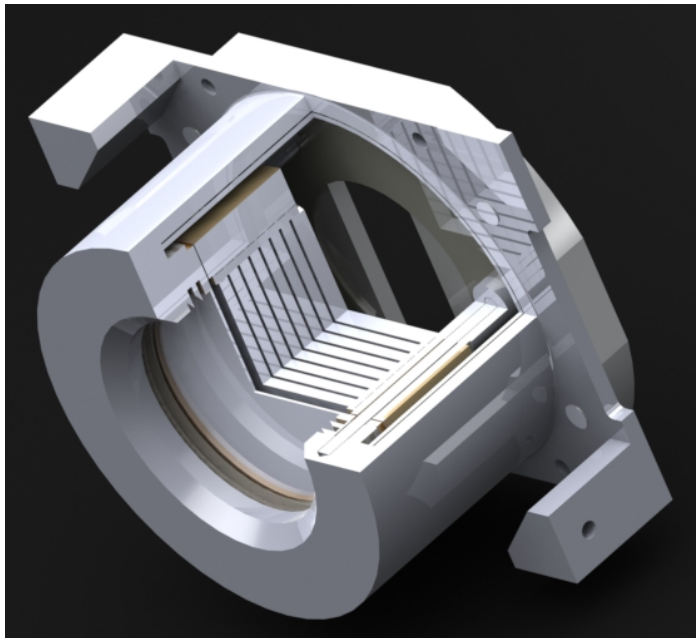

- 3U CubeSat
  - Three year mission with one year science
  - new proposal for extension
- Expected delivery of CubeSat May-2015

- MERiT : Miniaturized Electron pRoton Telescope
  - SSD and APD particle telescope (REPT heritage)

MERiT/SSD differential channels and science data

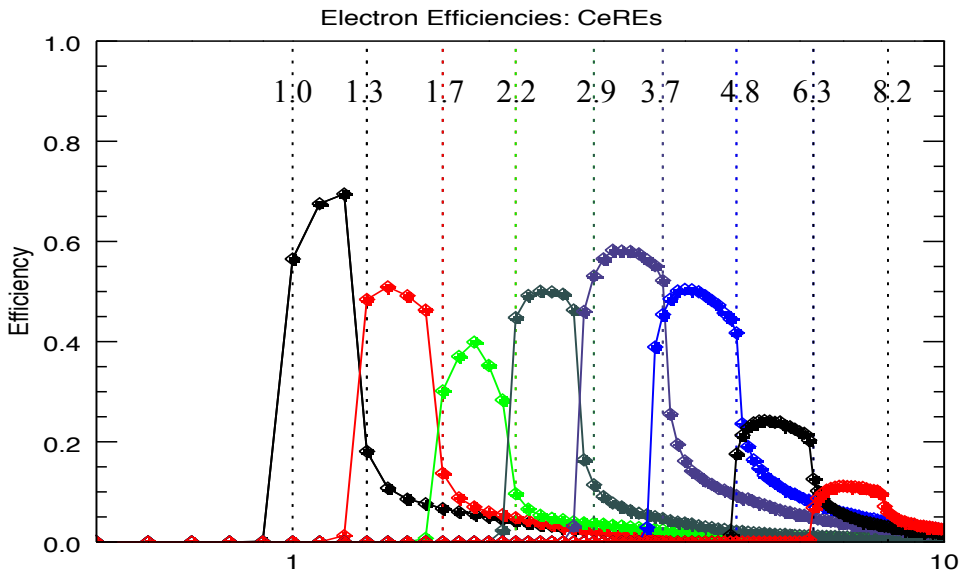

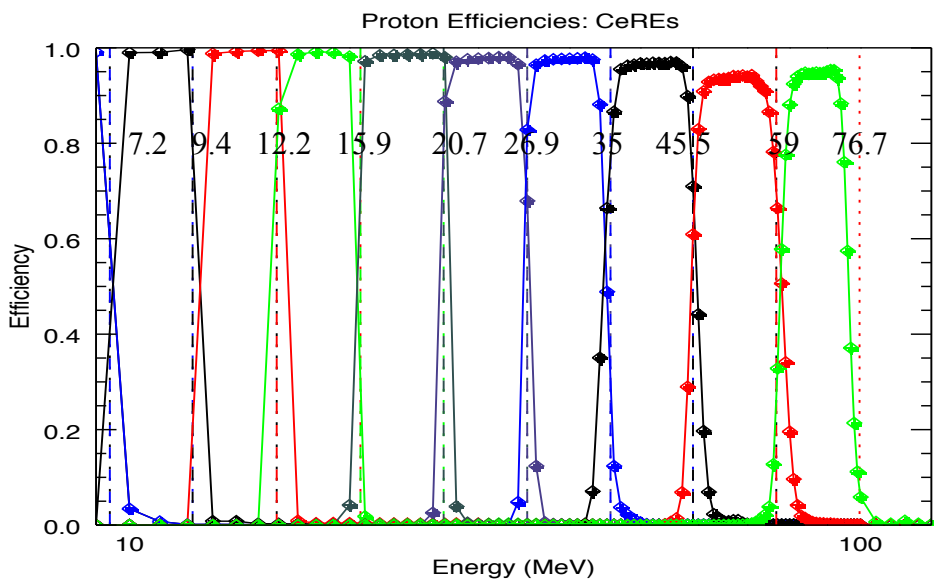

MERiT electron and Proton efficiencies (Geant4)

Name	Description	Type	Time res. (ΔT)	Bits act.	Tel.
MSe1	e^- diff. chan. #1	Int.	4ms	16	16
MSe2	e^- diff. chan. #2	Int.	4ms	16	16
MSe3	e^- diff. chan. #3	Int.	4ms	16	16
MSe4	e^- diff. chan. #4	Int.	4ms	16	16
MSe5	e^- diff. chan. #5	Int.	8ms	16	16
MSe6	e^- diff. chan. #6	Int.	8ms	16	16
MSe7	e^- diff. chan. #7	Int.	16ms	16	16
MSe8	e^- diff. chan. #8	Int.	16ms	16	16
MSp1	p diff. chan. #1	Int.	1s	16	8
MSp2	p diff. chan. #2	Int.	1s	16	8
MSp3	p diff. chan. #3	Int.	1s	16	8
MSp4	p diff. chan. #4	Int.	1s	16	8
MSp5	p diff. chan. #5	Int.	1s	16	8
MSp6	p diff. chan. #6	Int.	1s	16	8
MSp7	p diff. chan. #7	Int.	1s	16	8
MSp8	p diff. chan. #8	Int.	1s	16	8
MSp9	p diff. chan. #9	Int.	1s	16	8
MSp10	p diff. chan. #10	Int.	1s	16	8
MSs1	Singles #1	Int.	1s	32	16
MSs2	Singles #2	Int.	1s	32	16
MSs3	Singles #3	Int.	1s	32	16
MSs4	Singles #4	Int.	1s	32	16
MSs5	Singles #5	Int.	1s	32	16
MSs6	Singles #6	Int.	1s	32	16
MSs7	Singles #7	Int.	1s	32	16
MSs8	Singles #8	Int.	1s	32	16
MSevt	PHA: 100 events	Int.	1s	8x200x11††	
MSapd	APD electrons	Int.	4ms	24	8
	Transmit 100 events once every 1s (88bits/event)				

The encoding rate for the cadet radio is 2500 bytes/second. This works out to 1.728Gb per day.

MERiT/APD differential channels and science data

Channel	Particles	Logic	Detector	E-low	E-high	Accumulator	Telemetry	Time resolution	Bitrate
E1-A	electrons	E1(E2)	A	7.4	8.5	24	8	15	0.53
E1-B	electrons	E1(E2)	B	10.0	11.0	24	8	15	0.53
E1-C	electrons	E1(E2)	C	14.8	15.8	24	8	15	0.53
E1-D	electrons	E1(E2)	D	23.0	24.6	24	8	15	0.53
E2-A	electrons	E2(E3)	A	8.5	10.4	24	8	15	0.53
E2-B	electrons	E2(E3)	B	11.0	12.5	24	8	15	0.53
E2-C	electrons	E2(E3)	C	15.8	17.1	24	8	15	0.53
E2-D	electrons	E2(E3)	D	24.6	26.1	24	8	15	0.53
E3-A	electrons	E3(E4)	A	10.4	14.7	24	8	15	0.53
E3-B	electrons	E3(E4)	B	12.5	15.7	24	8	15	0.53
E3-C	electrons	E3(E4)	C	17.1	19.1	24	8	15	0.53
E3-D	electrons	E3(E4)	D	26.1	28.1	24	8	15	0.53
E4-A	electrons	E4(E5)	A	14.7	17.2	24	8	15	0.53
E4-B	electrons	E4(E5)	B	15.7	18.3	24	8	15	0.53
E4-C	electrons	E4(E5)	C	19.1	22.1	24	8	15	0.53
E4-D	electrons	E4(E5)	D	28.1	30.6	24	8	15	0.53
E5-A	electrons	E5(E6)	A	17.2	22.9	24	8	15	0.53
E5-B	electrons	E5(E6)	B	18.3	23.7	24	8	15	0.53
E5-C	electrons	E5(E6)	C	22.1	26.3	24	8	15	0.53
E5-D	electrons	E5(E6)	D	30.6	34.4	24	8	15	0.53
E6-A	electrons	E6(E7)	A	22.9	30.6	24	8	15	0.53
E6-B	electrons	E6(E7)	B	23.7	31.2	24	8	15	0.53
E6-C	electrons	E6(E7)	C	26.3	33.0	24	8	15	0.53
E6-D	electrons	E6(E7)	D	34.4	39.6	24	8	15	0.53
E7-A	electrons	E7(E8)	A	30.6	41.1	24	8	15	0.53
E7-B	electrons	E7(E8)	B	31.2	41.4	24	8	15	0.53
E7-C	electrons	E7(E8)	C	33.0	42.9	24	8	15	0.53
E7-D	electrons	E7(E8)	D	39.6	47.3	24	8	15	0.53
E8-A	electrons	E8(E9)	A	41.1	55.3	24	8	15	0.53
E8-B	electrons	E8(E9)	B	41.4	55.6	24	8	15	0.53
E8-C	electrons	E8(E9)	C	42.9	56.6	24	8	15	0.53
E8-D	electrons	E8(E9)	D	47.3	59.6	24	8	15	0.53
M1	mixed	M1(M2)	all	55.0	81.8	24	8	15	0.53
M2	mixed	M2(M3)	all	81.8	121.6	24	8	15	0.53
M3	mixed	M3(M4)	all	121.6	180.9	24	8	15	0.53
M4	mixed	M4(M5)	all	180.9	269.0	24	8	15	0.53

Electrons
~7 to ~40 keV

MERiT/APD differential channels and science data

P1-A	Protons	P1(P2)	A	415.3	516.4	24	8	15	0.53
P1-B	Protons	P1(P2)	B	434.4	533.7	24	8	15	0.53
P1-C	Protons	P1(P2)	C	484.0	578.6	24	8	15	0.53
P1-D	Protons	P1(P2)	D	606.3	691.7	24	8	15	0.53
P2-A	Protons	P2(P3)	A	516.4	644.5	24	8	15	0.53
P2-B	Protons	P2(P3)	B	533.7	659.9	24	8	15	0.53
P2-C	Protons	P2(P3)	C	578.6	700.1	24	8	15	0.53
P2-D	Protons	P2(P3)	D	691.7	802.4	24	8	15	0.53
P3-A	Protons	P3(P4)	A	644.5	805.8	24	8	15	0.53
P3-B	Protons	P3(P4)	B	659.9	819.2	24	8	15	0.53
P3-C	Protons	P3(P4)	C	700.1	854.5	24	8	15	0.53
P3-D	Protons	P3(P4)	D	802.4	947.4	24	8	15	0.53
P4-A	Protons	P4(P5)	A	805.8	1008.3	24	8	15	0.53
P4-B	Protons	P4(P5)	B	819.2	1019.4	24	8	15	0.53
P4-C	Protons	P4(P5)	C	854.5	1047.5	24	8	15	0.53
P4-D	Protons	P4(P5)	D	947.4	1115.6	24	8	15	0.53
P-INT	Protons	P5	all	1000.0	N/A	24	8	15	0.53
Total for the slow counters: bits/second									28.80

MERiT/APD differential channels and science data

Channel	Particles	Logic	Detector	E-low	E-high	Accumulator	Telemetry	Time resolution	Bitrate
P1-A	Protons	P1(P2)	A	415.3	516.4	24	8	15	0.53
P1-B	Protons	P1(P2)	B	434.4	533.7	24	8	15	0.53
P1-C	Protons	P1(P2)	C	484.0	578.6	24	8	15	0.53
P1-D	Protons	P1(P2)	D	606.3	691.7	24	8	15	0.53
P2-A	Protons	P2(P3)	A	516.4	644.5	24	8	15	0.53
P2-B	Protons	P2(P3)	B	533.7	659.9	24	8	15	0.53
P2-C	Protons	P2(P3)	C	578.6	700.1	24	8	15	0.53
P2-D	Protons	P2(P3)	D	691.7	802.4	24	8	15	0.53
P3-A	Protons	P3(P4)	A	644.5	805.8	24	8	15	0.53
P3-B	Protons	P3(P4)	B	659.9	819.2	24	8	15	0.53
P3-C	Protons	P3(P4)	C	700.1	854.5	24	8	15	0.53
P3-D	Protons	P3(P4)	D	802.4	947.4	24	8	15	0.53
P4-A	Protons	P4(P5)	A	805.8	1008.3	24	8	15	0.53
P4-B	Protons	P4(P5)	B	819.2	1019.4	24	8	15	0.53
P4-C	Protons	P4(P5)	C	854.5	1047.5	24	8	15	0.53
P4-D	Protons	P4(P5)	D	947.4	1115.6	24	8	15	0.53
P-INT	Protons	P5	all	1000.0	N/A	24	8	15	0.53
Total for the slow counters: bits/second									28.80
E1-C	electrons	E1(E2)	C	14.8	15.8	24	8	1	8.00
E2-C	electrons	E2(E3)	C	15.8	17.1	24	8	1	8.00
E3-C	electrons	E3(E4)	C	17.1	19.1	24	8	1	8.00
E4-C	electrons	E4(E5)	C	19.1	22.1	24	8	1	8.00
E5-C	electrons	E5(E6)	C	22.1	26.3	24	8	1	8.00
E6-C	electrons	E6(E7)	C	26.3	33.0	24	8	1	8.00
E7-C	electrons	E7(E8)	C	33.0	42.9	24	8	1	8.00
E8-C	electrons	E8(E9)	C	42.9	56.6	24	8	1	8.00
Total for the fast counters: bits/second									64.00

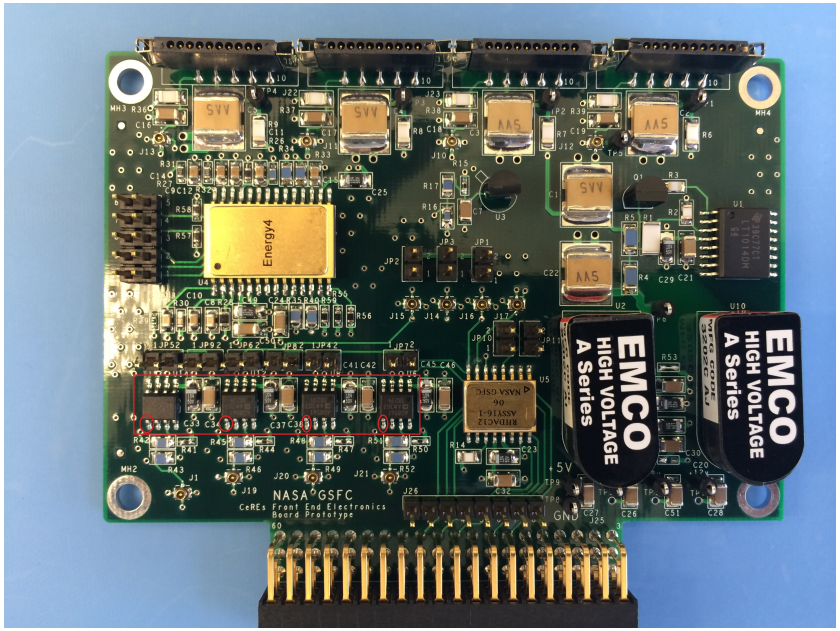

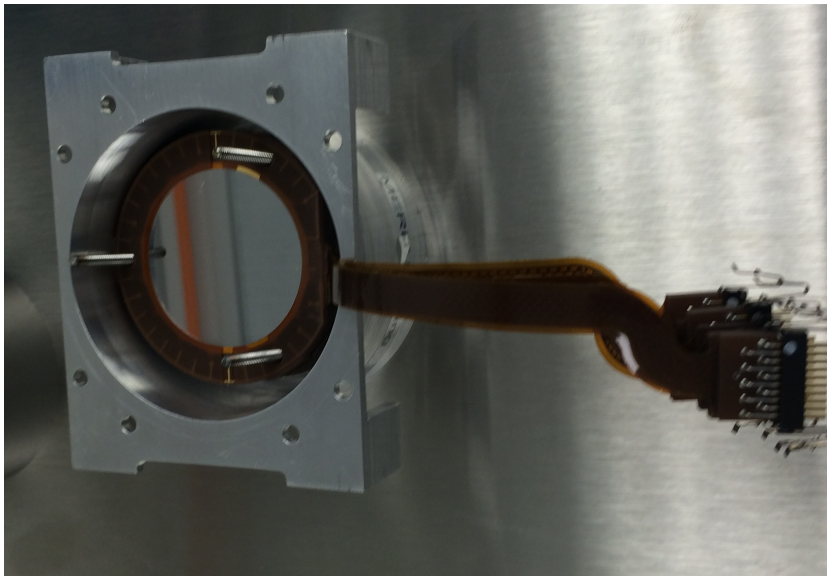

CSPv1 Hardware Design

- CSPv1: New family of small flight-ready processing boards
- Current status of CSPv1 design: Completed, verified, & in production
  - Completed revisions, manufacturing, assembly of **All-COTS** and **Hybrid CSPv1**
  - Confirmed functionality of **evaluation board** interfaces and associated HDL design cores

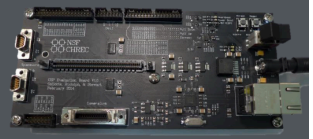

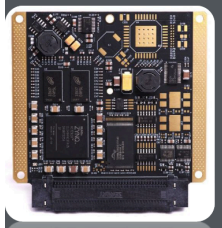

- Many-in-One Design
  - Both COTS and Hybrid options
  - Selective population scheme

CSPv1 Features

- Zynq 7020 (ARM dual-core Cortex-A9 + Artix-7 FPGA)
- (1-4) GB NAND Flash
- (256 MB–1 GB) DDR3
- Dedicated Watchdog Unit
- Internal Power Regulation
- 26 Configurable ARM GPIO Pins
- 12 Single-Ended FPGA I/O Pins
- 24 High-Speed Differential Pairs

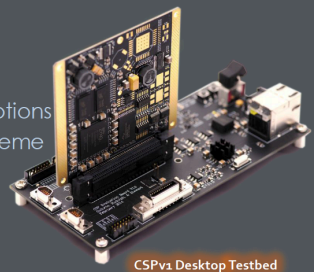

CSPv1 Desktop Testbed

CHREC
NSF Center for High-Performance Reconfigurable Computing

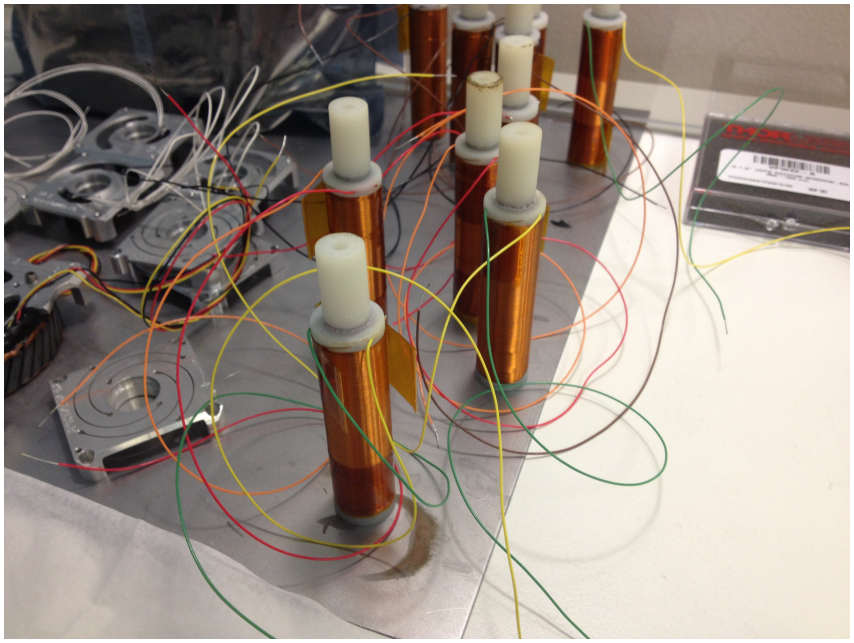

Thanks !

CSPv1 processor developed by the Center for High Performance Computing (CHREC)

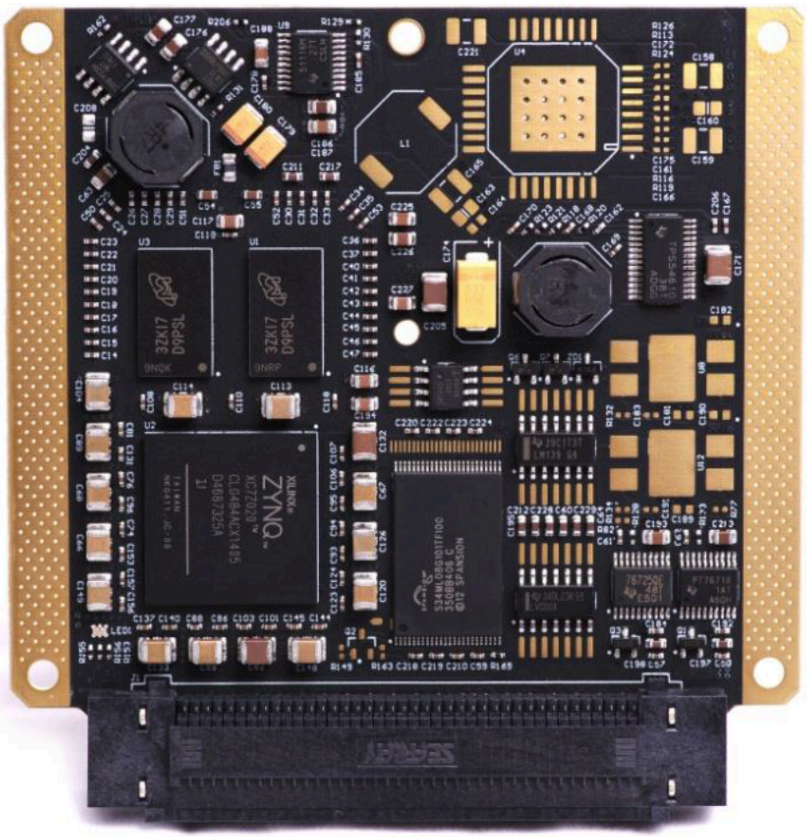

All COTS CSPv1 board in 1U form factor

- **CHREC Space Processor (CSPv1)**
  - Xilinx Zynq-7020 Processor (COTS)
  - combination of COTS, RadHard, fault tolerance
  - custom, lightweight, Linux-based operating system on the ARM cores

- **Flight software**
  - integrated the Core Flight Executive (cFE) flight software framework (designed specifically for s/c and instruments on embedded platforms)
  - the Core Flight System (CFS)
  - both from NASA Goddard.

CHREC: University of Florida (lead), NASA Goddard, and Brigham Young University, NASA Kennedy, Honeywell, Space Micro, L-3 CE, NASA Johnson, NASA Ames, Xilinx, …

FPGA implementation of MERiT data processing

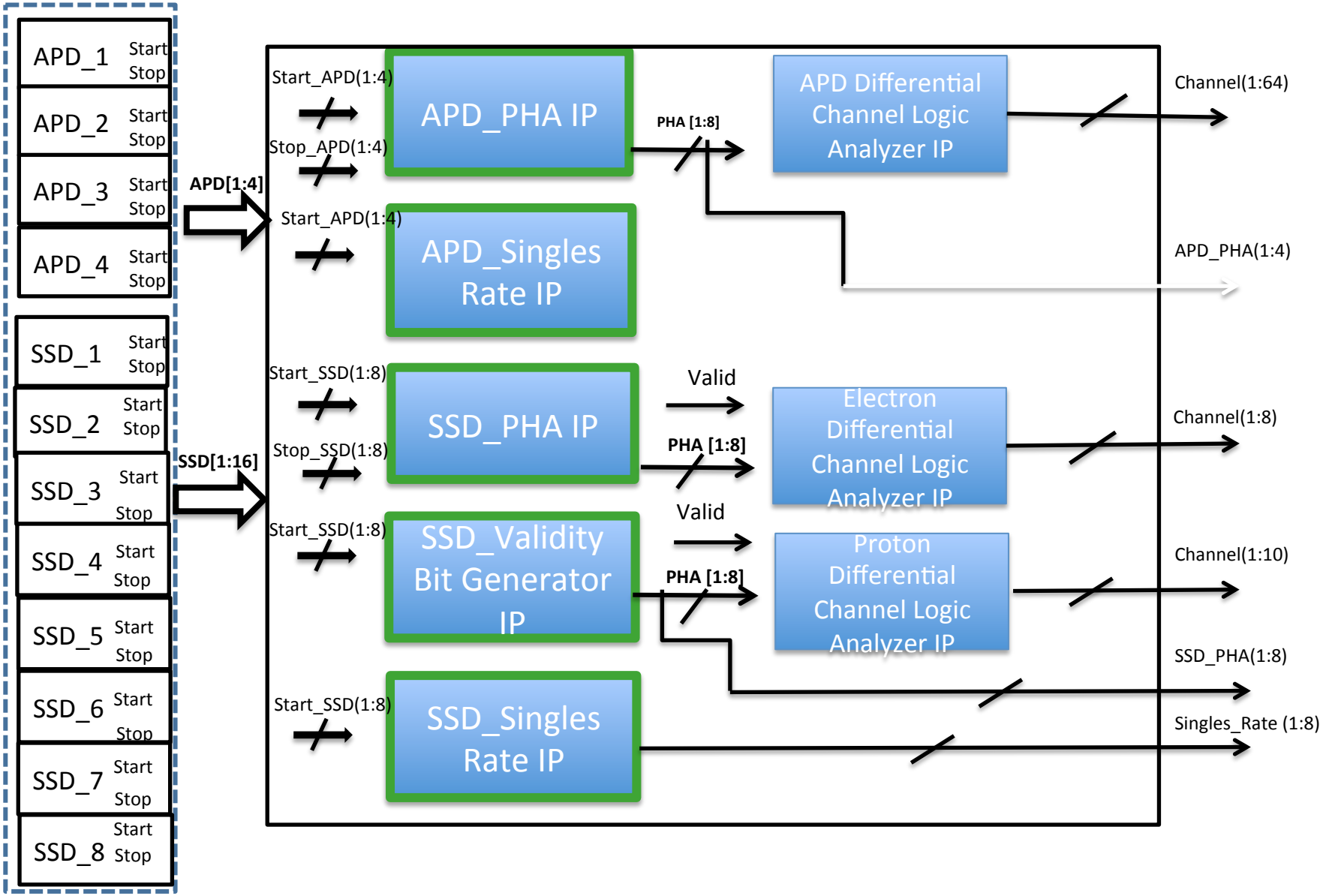

CeREs Power budget

CeREs solar panels: ClydeSpace, 4 deployable -cell panels (28°C, 7W/panel)

Subsystem	Component	Power (W)	Orbit Length (hours)	Science Mode + Sun Pointing	
				Duty Cycle	WHrs Used/Orbit
Experiment	MERiT	3	1.55	0.333	1.548
GNC	Wheel XX - low	0.2	1.55	0.839	0.260
	Wheel YY - low	0.2	1.55	0.839	0.260
	Wheel ZZ - low	0.2	1.55	0.839	0.260
	Wheel Maneuver	1.776	1.55	0.013	0.035
	GPS	1.76	1.55	1.000	2.728
	Torque Rods	1	1.55	0.200	0.310
	Star Trackers	0.83	1.55	1.000	1.287
Comm	Tx	12.33	1.55	0.000	0.000
	Rx	0.3	1.55	1.000	0.465
	Antenna	0	1.55	1.000	0.000
C&DH	XB1 Core	3.64	1.55	1.000	5.642
	CSP	2.5	1.55	0.333	1.290
Power	EPS	0.51	1.55	1.000	0.791
Total Consumed					14.876
Consumption EPS Losses =		10.0%			1.488
Consumption Harness Losses =		5.0%			0.744
Consumption Battery Losses =		5.0%			0.744
Total Consumed (Inc EPS, Harness and Battery Losses)					17.851
Worst Case Enegy Production (Orbit Average X Orbit Length X Duty)					19.406
Charging EPS Losses =		13.0%			2.523
Charging Battery Losses =		0.0%			0.000
Worst Case Enegy Production (Including EPS and Battery Losses)					16.883